ARK-3534B

Intel® 12th Gen Core™ i3/i5/i7/i9 LGA1700 Expansion Fanless Box PC

Windows Embedded WISE-DeviceOn SUSI API

Features

- Support Intel® 12th Gen. Core™ i3/i5/i7/i9 processor
- Triple independent display: HDMI + HDMI + Optional Display
- DDR5 SO-DIMM memory support up to 64 GB
- 9-36V_{DC} wide range power input
- Up to 3sets 2.5" hard drive bays, support Intel® SW RAID
- Support up to 4GbE, 8USB, 8COM, 16bit DIO, 2CANBus, TPM2.0
- SUSI API, WISE-DeviceOn, McAfee and Acronis bundled

Specifications

Processor System	CPU	i9-12900E	i7-12700E	i5-12500E	i3-12100E	G6900E
	Frequency	1.7-5.0GHz	1.6-4.8GHz	2.9-4.5GHz	3.2-4.2GHz	3.0GHz
	L3 Cache	30MB	25MB	18MB	12MB	4MB
	Cores	12	12	6	4	2
	TDP	65W	65W	65W	60W	46W
	Chipset	H610E (R680E support by project)				
	BIOS	AMI EFI 256Mbit				
Memory	Technology	DDR5 4800 MHz				
	Max. Capacity	64 GB				
	Socket	2 x 288-pin SO-DIMM				
Graphics	Chipset	Intel® UHD Graphics 770				
	Graphic Engine	DirectX 12, OpenGL 4.5 HW Encode: H.265/HEVC, H.264/MPEG-4 AVC, MPEG-2, JPEG/MJPEG and VP8. HW Decode: H.265/HEVC, H.264/MPEG-4 AVC, MPEG-2, VC-1/WMV9, JPEG/MJPEG, VP8 and VP9				
	HDMI	2 HDMI port, HDMI 2.0 for HD video playback, 4096x2160@30Hz				
	Optional 3rd Display module	DVI-D / DP / HDMI Display Port				
	Triple Display	HDMI+HDMI + 3rd display module				
Ethernet	LAN1	10/100/1000 Mbps Intel I219-LM GbE, support Wake On Lan				
	LAN2	10/100/1000/2500 Mbps Intel i225-V GbE, support Wake On Lan				
Audio	Interface	Realtek ALC888S, High Definition Audio, Line-out/Mic-in (switch)				
Others	Watch dog Timer	255-level timer interval, setup by software				
	TPM	TPM 2.0 (by optional AMO-I029)				
I/O Interface	Serial Port	4 x RS-232/422/485 port with auto flow control, 2 x RS-232 (additional COM7/8 2 x RS-232 by optional cable)				
	USB	4 x USB 3.2 (2 x Gen2, 2 x Gen1), 4 x USB 2.0				
	GPIO	16bit GPIO (by optional cable)				
Expansions	CANBus	2 ports by optional cable				
	M.2	1 x M2. 2230 E key and 1 x M.2 2280 B key with SIM holder #1				
	Add-on Card Slot	1 Slot PCIex4 + 1 Slot PCIex16 (If card power power consumption over 30W for add-on cards, please bundled with AMO-3508 kit for power and thermal solutions)				
	Maximum card size	110mm (H) x 180mm (L)				
Storage	HDD	2 x 2.5" SATAIII 15mm height HDD bay support Intel SW RAID (Up to 3 x 2.5" SATAIII HDD bays)				
	NVME	1 x PCIex2 (Share with M.2 2280 B key)				
Software Support	Microsoft Windows	Windows 10				
	Linux	By Project Support				
Power Requirements	Power Type	AT/ATX				
	Power Input Voltage	9-36V				
	Power Adapter	AC to DC, 230W (Optional)				
Power Consumption (CPU/Memory Only)	Typical	TBD				
	Max.	TBD				
Mechanical	Construction	Aluminum housing				
	Mounting	Desk mounting				
	Dimensions (W x H x D)	156 x 204 x 230 mm				
	Weight	5.705Kg				
Environment	Operating Temperature	Up to 65W processor with extended temp peripherals: -20 ~ 60° C with 0.7m/s air flow with HDD: 0 ~ 40° C with 0.7m/s air flow				
	Storage Temperature	-40 ~ 85° C				
	Relative Humidity	95% @ 40° C (non-condensing)				
	Vibration During Operation	With SSD: 3 Grms, IEC 60068-2-64, random, 5 ~ 500 Hz, 1 hr/axis.				
	Shock During Operation	With SSD: 30 G, IEC 60068-2-27, half sine, 11 ms duration				
	EMC	CE/FCC Class B, CCC, BSMI				
	Safety	CB, UL, CCC, BSMI				

#1 SIM holder and M.2 slot are hardware interfaces for wireless communication integration only. System level RF certification is not available.

All product specifications are subject to change without notice.

Last updated: 22-Jun-2022

Dimensions

Unit: mm

Wallmount

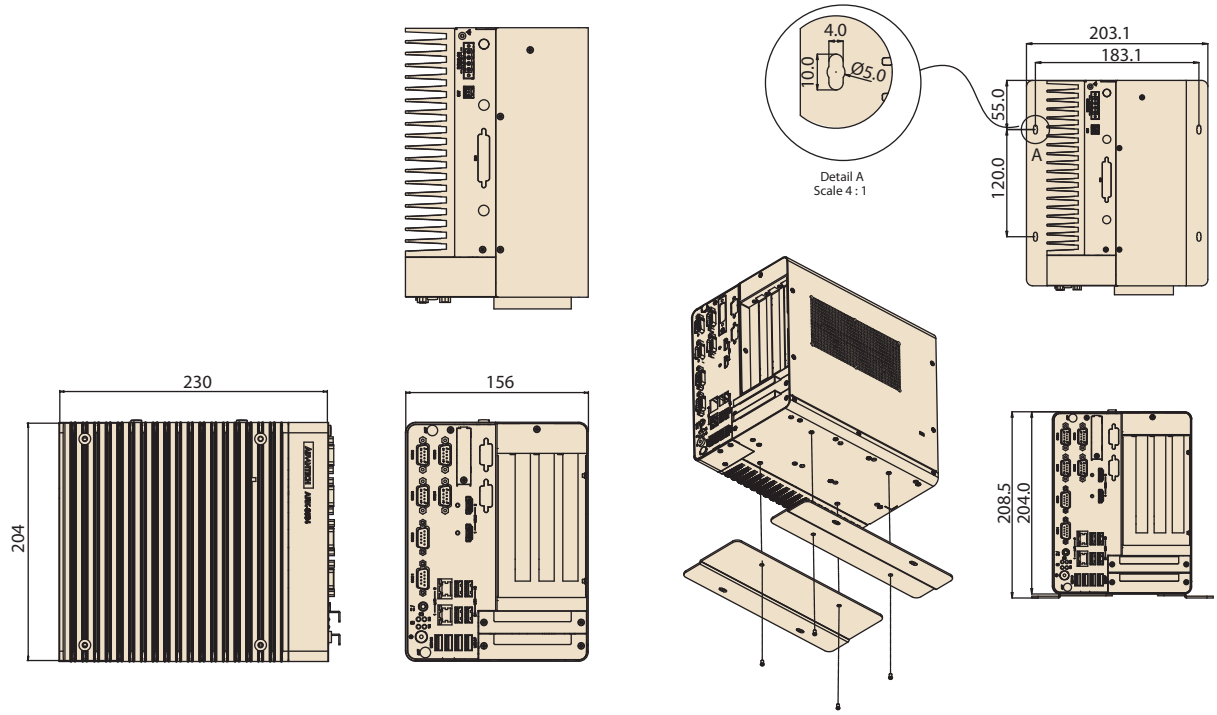

External I/O Mechanical Layout/Drawing

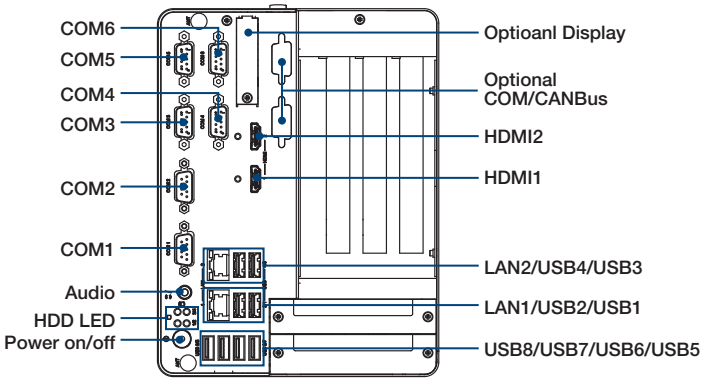

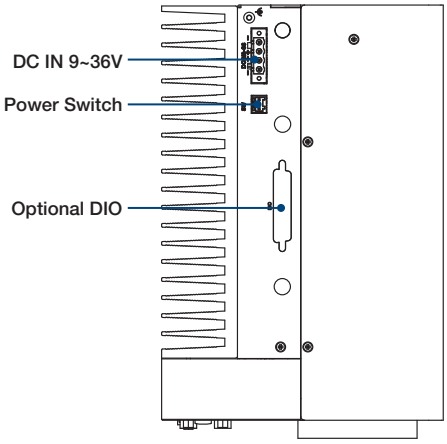

Ordering Information

Part No.	CPU	DDR5	Gbe	HDMI	Option 3rd display module	RS-232	RS-232/422/485	USB	M.2 B key	SIM	M.2 E Key	DC Input	Expansion
ARK-3534B-00A1	LGA1700 Socket Type	Up to 64GB	2	2	1	Up to 4	4	8	1	1	1	9-36V	PCIex4 + PCIex16

Note: CPU/Memory/Storage and operating system bundled by request.

Packing List

Part Number	Description
-	ARK-3534B Unit
-	User Manual (Simplified Chinese)
-	China RoHS
-	Desk mounting kit
36WSWPDOBUND11	WISE-DeviceOn
36WSWPDOBD0211	McAfee Application Control Lite/Acronis Backup 11.7 for Windows PC

Embedded OS

Part Number	Description
TBD	

ARK-3534B Optional Expansion Kit for add-on Cards

Part Number	Description
AMO-3508	ARK-3534B/C fan kit

*Please add this kit once the add-on card power consumption over than 30Watts

ARK-3534B Default SKU Option Items

Optional Item for Default SKU

Part Number	Description
96PSA-A230W24P4-3	AC to DC adapter, DC 24V 230W, -20 ~ 60 °C
1702002600	Power cable 3-pin 183cm, USA type
1702002605	Power cable 3-pin 183cm, EU type
1702031801	Power cable 3-pin 183cm, UK type
1700000237	Power cable, 3-Pin 183cm, PSE type

ARK-3534B Optional HDD expansion Kit

Part Number	Description
TBD	

Optional Display Module

Part Number	Description
AMO-D001E	DVI-D module
AMO-D002E	DP module
AMO-D003E	HDMI module

Optional TPM Module

Part Number	Description
AMO-I029	TPM 2.0 Infineon SLB9670V2.0